## LEGEND:

- EXISTING CONTOUR LINE
- PROPOSED CONTOUR LINE
- EXISTING SPOT ELEVATION
- PROPOSED SPOT ELEVATION
- 4" PVC FOUNDATION DRAIN
- 4" PVC LEADER DRAIN
- EXISTING TREE TO REMAIN
- EXISTING TREE TO BE REMOVED
- PROPOSED SANITARY SEWER CONNECTION
- PROPOSED WATER CONNECTION
- PROPOSED GAS CONNECTION
- PROPOSED 3" REPLACEMENT TREE

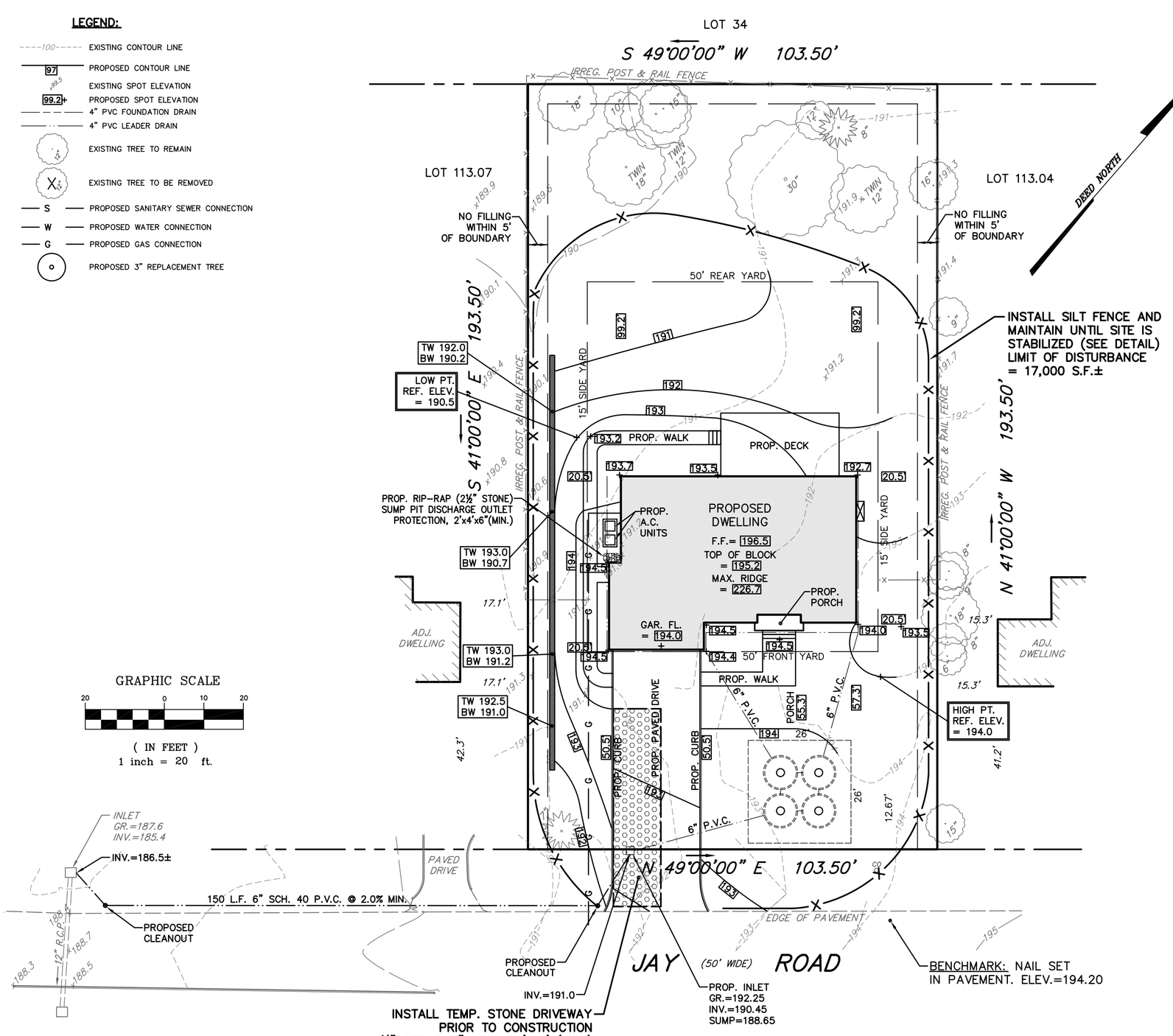


GRAPHIC SCALE

20 0 10 20

( IN FEET )
1 inch = 20 ft.

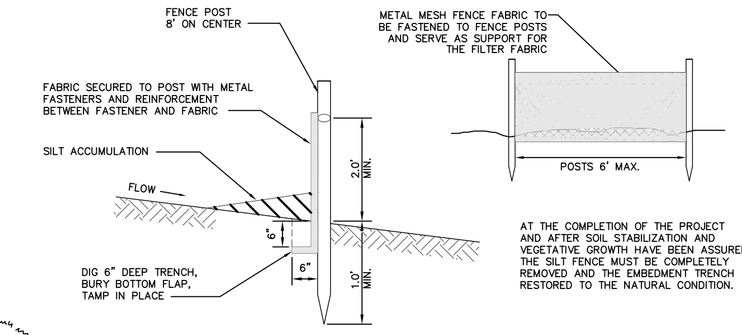


AT THE COMPLETION OF THE PROJECT AND AFTER SOIL STABILIZATION AND VEGETATIVE GROWTH HAVE BEEN ASSURED, THE SILT FENCE MUST BE COMPLETELY REMOVED AND THE EMBEDMENT TRENCH RESTORED TO THE NATURAL CONDITION.

### "SUPER" SILT FENCE DETAIL

SCALE N.T.S.

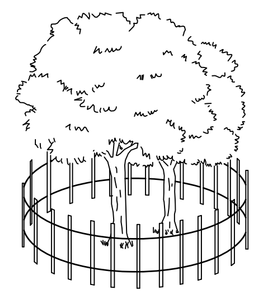

BOX ALL TREES WITHIN 25 FEET OF THE SITE TO PREVENT MECHANICAL INJURY. FENCING OR OTHER BETTER BARRIER SHOULD BE INSTALLED AT THE DRIP LINE OF THE TREE BRANCHES WHERE POSSIBLE.

### TREE PROTECTION DETAIL

SCALE N.T.S.

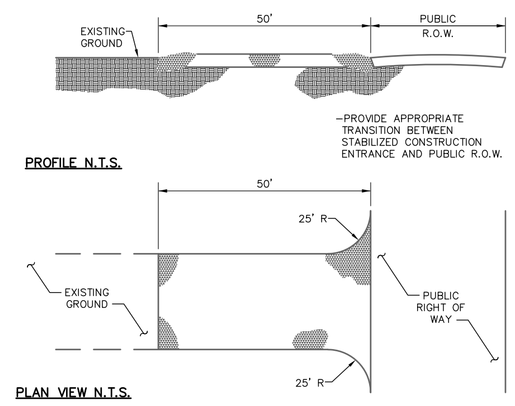


### ANTI–TRACKING PAD

SCALE N.T.S.

### CHATHAM TOWNSHIP SOIL EROSION AND SEDIMENT CONTROL NOTES

1.) ALL SOIL EROSION AND SEDIMENT CONTROL PRACTICES ON THIS PLAN WILL BE CONSTRUCTED IN ACCORDANCE WITH THE "NEW JERSEY STANDARDS FOR SOIL EROSION AND SEDIMENT CONTROL," (REVISED 1987) AND WILL BE IN PLACE PRIOR TO ANY SOIL DISTURBANCE OR IN THEIR PROPER SEQUENCE AND MAINTAINED UNTIL PERMANENT PROTECTION IS ESTABLISHED.

2.) CHATHAM TOWNSHIP WILL BE NOTIFIED 72 HOURS PRIOR TO ANY LAND DISTURBANCE.

3.) DURING AND AFTER CONSTRUCTION, THE OWNER WILL BE RESPONSIBLE FOR THE MAINTENANCE AND UPKEEP OF THE DRAINAGE STRUCTURES , VEGETATIVE COVER, AND ANY OTHER MEASURES DEEMED APPROPRIATE BY THE TOWNSHIP.

4.) A CRUSHED STONE VEHICLE WHEEL CLEANING BLANKET WILL BE INSTALLLED WHEREVER A CONSTRUCTION ACCESS ROAD INTERSECTS ANY PAVED ROADWAY. SAID BLANKET WILL BE COMPOSED OF 2 1/2" CRUSHED STONE, WILL BE AT LEAST 560 FEET LONG AND THE WIDTH OF THE EXIT ROADWAY OR DRIVEWAY, AND WILL BE PROPERLY MAINTAINED.

5.) ALL PAVED ROADWAYS MUST BE KEPT CLEAN AT ALL TIMES.

6.) ALL NEW ROADWAYS AND DRIVEWAYS WILL BE TREATED WITH A SUITABLE SUBBASE UPON ESTABLISHMENT OF FINAL GRADE ELEVATIONS.

7.) DISTURBED AREAS SHALL BE MAINTAINED IN A ROUGH GRADED CONDITION AND TEMPORARILY SEEDED AND MULCHED UNTIL PROPER WEATHER CONDITIONS EXIST FOR THE ESTABLISHMENT OF PERMANENT VEGETATIVE COVER.

8.) ALL SOIL STOCKPILED FOR A PERIOD OF GREATER THAN 30 DAYS WILL BE TEMPORARILY SEEDED AND MULCHED.

9.) STOCKPILES SHALL NOT BE LOCATED WITHIN 50 FEET OF A FLOODPLAIN, SLOPE, DRAINAGE FACILITY, OR ROADWAY. ALL STOCKPILE BASES SHALL BE PROTECTED BY A HAY BALE BARRIER OR SEDIMENT FENCE.

10.) IMMEDIATELY FOLLOWING INITIAL DISTURBANCE OR ROUGH GRADING, ALL CRITICAL AREAS SUBJECT TO EROSION WILL RECEIVE A TEMPORARY SEEDING IN COMBINATION WITH STRAW MULCH OR SUITABLE EQUAL, AT A 2 TON/ACRE RATIO RATE, ACCORDING TO STATE STANDARDS.

11.) TEMPORARY STABILIZATION – ANY DISTURBED AREA THAT WILL BE LEFT EXPOSED FOR MORE THAN THIRTY (30) DAYS AND NOT SUBJECT TO CONSTRUCTION ACTIVITIES SHALL IMMEDIATELY BE STABILIZED UPON DISTURBANCE BY APPLYING THE FOLLOWING:

a) GROUND LIMESTONE AT A RATE OF 90 POUNDS PER 1,000 SQUARE FEET.

b) FERTILIZER AT A RATE OF 14 POUNDS PER 1,000 SQUARE FEET USING A 10–20–10 ANALYSIS OR AN EQUIVILENT WORKED INTO THE SOIL A MINIMUM OF 4".

c) SEED SHALL BE ANNUAL RYEGRASS APPLIED AT NOT LESS THAN ONE POUND PER 1,000 SQUARE FEET.

d) MULCH ALL NEWLY SEEDED AREA WITH UNROTTED SALT HAY OR SMALL GRAIN STRAW AT A RATE OF 90 POUNDS PER 1,000 SQUARE FEET ACCORDING TO THE NJ STANDARD. MULCH SHALL NOT BE GROUND INTO SHORT PIECES AND IN NO CASE SHALL MORE THAN 5 DAYS ELAPSE BETWEEN SEEDING AND MULCHING.

e) MULCH SHALL BE ANCHORED WITH A LIQUID MULCH BINDER APPLIED AT A RATE OF ONE GALLON PER 1,000 SQUARE FEET OR BY APPROVED METHODS (I.E.PEG AND TWINE, MULCH NETTING).

12.) BETWEEN OCTOBER 1 AND MARCH 1 AND WHEN THE SEASON PROHIBITS TEMPORARY SEEDING OR WHEN DISTURBED AREAS ARE SCHEDULED FOR IMMEDIATE LANDSCAPING, APPLYING THE AFOREMENTIONED ITEMS "d)" AND "e)" WILL BE ADEQUATE.

13.) SEEDING DATES: THE FOLLOWING ARE THE RECOMMENDED SEEDING DATES FOR THE ESTABLISHMENT OF TEMPORARY OR PERMANENT VEGETATION:

a) SPRING: MARCH 1 – MAY 15
b) FALL: AUGUST 15 – OCTOBER 1

14.) PERMANENT VEGETATIVE COVER IS TO BE ESTABLISHED ON EXPOSED AREAS WITHIN 10 DAYS AFTER FINAL GRADING. MULCH IS TO BE USED FOR PROTECTION UNTIL FINAL VEGETATION IS ESTABLISHED.

15.) PERMANENT SEEDING AND STABILIZATION TO BE IN ACCORDANCE WITH THE STANDARDS FOR PERMANENT VEGETATIVE COVER–ALL EXPOSED SURFACES WILL BE TREATED WITH 4" TOPSOIL PRIOR TO FINAL STABILIZATION AND THE FOLLOWING ITEMS APPLIED AT THE DESIGNATED RATES:

a) LIME SHALL BE APPLIED AT 90 POUNDS PER 1,000 SQUARE FEET CONSISTING OF GROUND LIMESTONE INCORPORATED INTO THE TOP 4" OF TOPSOIL.

b) FERTILIZER SHALL BE 14 POUNDS PER 1,000 SQURE FEET 10–20–10 INCORPORATED INTO THE TOP 4" OF TOPSOIL.

c) SEED SHALL BE 25 POUNDS PER ACRE OF KENTUCKY BLUEGRASS, 15 POUNDS PER ACRE OF RED FESCUE, SPREADING FESCUE AT 15 POUNDS PER ACRE, AND 10 POUNDS PER ACRE OF PERENNIAL RYEGRASS.

d) IN SHADE AREAS, INCREASE RED FESCUE TO 20 POUNDS PER ACRE AND DECREASE KENTUCKY BLUEGRASS TO 20 POUNDS PER ACRE.

e) MULCH ALL NEWLY SEEDED AREA WITH UNROTTED SALT HAY OR SMALL GRAIN STRAW AT A RATE OF 90 POUNDS PER 1,000 SQUARE FEET ACCORDING TO THE NJ STANDARD. MULCH SHALL NOT BE GROUND INTO SHORT PIECES AND IN NO CASE SHALL MORE THAN 5 DAYS ELAPSE BETWEEN SEEDING AND MULCHING.

f) MULCH SHALL BE ANCHORED WIH A LIQUID MULCH BINDER APPLIED AT A RATE OF ONE GALLON PER 1,000 SQUARE FEET OR BY APPROVED METHODS (I.E.PEG AND TWINE, MULCH NETTING).

16.) MAXIMUM SIDE SLOPES OF ALL EXPOSED SURFACES SHALL NOT EXCEED 3:1 UNLESS OTHERWISE APPROVED BY THE TOWNSHIP.

17.) THE SITE SHALL, AT ALL TIMES, BE GRADED AND MAINTAINED SUCH THAT ALL STORM WATER RUNOFF IS DIVERTED TO SOIL EROSION AND SEDIMENT CONTROL FACILITIES.

18.) ALL DEWATERING OPERATIONS MUST DISCHARGE DIRECTLY INTO A SEDIMENT FILTER AREA. THE SEDIMENT FILTER SHOULD BE COMPOSED OF A SUITABLE FILTER FABRIC FILTER.

19.) ALL SEDIMENTATION STRUCTURES WILL BE INSPECTED AND MAINTAINED ON A REGULAR BASIS.

20.) ALL STORM DRAIN INLETS SHALL BE PROTECTED WITH GRAVEL FILTERS TO PREVENT ENTRY OF SEDIMENT CARRIED BY RUNOFF WATER UNTIL VEGETATION AND/OR PAVING IS ESTABLISHED.

21.) ALL STORM DRAINAGE OUTLETS WILL BE STABILIZED AS REQUIRED BEFORE THE DISCHARGE POINTS BECOME OPERATIONAL.

22.) ALL TREES TO REMAIN AFTER CONSTRUCTION ARE TO BE PROTECTED WITH TREE PROTECTION DEVICES OR SEDIMENT BARRIERS.

23.) THE TOWNSHIP MAY REQUEST ADDITIONAL MEASURES TO MINIMIZE ONOR OFF SITE EROSION PROBLEMS DURING CONSTRUCTION.

24.) SEQUENCE OF CONSTRUCTION:

| | |
|---|---|
| a) INSTALL VEHICLE WHEEL CLEANING BLANKET AND INLET PROTECTION. | 1 TO 2 WEEKS |
| b) INSTALL SILT FENCE. | |
| c) CLEAR SITE. | |
| d) STRIP AND STOCKPILE SOIL. | |
| e) CONSTRUCT SITE IMPROVEMENTS. | 8 TO 10 MONTHS |
| f) PROVIDE TEMPORARY STABILIZATION. | |
| g) PROVIDE PERMANENT STABILIZATION. | |
| h) REMOVE TEMPORARY SILT FENCE, INLET PROTECTION AND OTHER SOIL EROSION CONTROLS. | 1 TO 2 WEEKS |
| TOATAL PROJECT TIMEFRAME = | 10 TO 12 MONTHS |

25.) A COPY OF THE SOIL EROSION AND SEDIMENT CONTROL PLAN MUST BE ON–SITE AT ALL TIMES AND MADE AVAILABLE TO THE TOWNSHIP REPRESENTATIVE DURING INSPECTION.

DUST CONTROL NOTES

THE FOLLOWNG METHODS SHOULD BE CONSIDERED FOR CONTROLLING DUST:

MULCHES–SEE STANDARD FOR STABILIZATION WITH MULCHES ONLY (PG. 5–1).

VEGETATIVE COVER–SEE STANDARD FOR TEMPORARY VEGETATIVE COVER (PG. 7–1), PERMANENT VEGETATIVE COVER FOR SOIL STABILIZATION (PG. 4–1), AND PERMANENT STABILIZATION SITH SOD (PG. 6–1).

SPRAY–ON ADHESIVES–ON MINERAL SOILS (NOT EFFECTIVE ON MUCK SOILS). KEEP TRAFFIC OFF THESE AREAS.

TILLAGE–TO ROUGHEN SURFACE AND BRING CLODS TO THE SURFACE. THIS IS A TEMPORARY EMERGENCY MEASURE WHICH SHOULD BE USED BEFORE SOIL BLOWING STARTS. BEGIN PLOWING ON WIDWARD SIDE OF SITE. CHISEL–TYPE PLOWS SPACED ABOUT 12 INCHES APART, AND SPRING–TOOTHED HARROWS ARE EXAMPLES OF EQUIPMENT WHICH MAY PRODUCE THE DESIRED EFFECT.

SPRINKLING–SITE IS SPRINKLED UNTIL THE SURFACE IS WET.

BARRIERS–SOLID BOARD FENCES, SNOW FENCES, BURLAP FENCES, CRATE WALLS, BALES OF HAY, AND SIMILAR MATERIAL CAN BE USED TO CONTROL AIR CURRENTS ADN SOIL BLOWING.

CALCIUM CHLORIDE–SHALL BE IN THE FORM OF LOOSE, DRY GRANULATES OF FLAKES FINE ENOUGH TO FEED THROUGH COMMONLY USED SPREADERS AT A RATE THAT WILL KEEP SURFACE MOIST BUT NOT CAUSE POLLUTION OR PLANT DAMAGE. IF USED ON STEEPER SLOPES, THEN USE OTHER PRACTICES TO PREVENT WASHING INTO STREAMS, OR ACCUMULATION AROUND PLANTS.

STONE–COVER SURFACE WITH CRUSHED STONE OR COARSE GRAVEL.

TABLE 16–1: DUST CONTROL MATERIALS

| MATERIAL | WATER DILUTION | TYPE OF NOZZLE | APPLY GALLONS/ACRE |
|---|---|---|---|
| ANIONIC ASPHALT EMULSION | 7:1 | COARSE SPRAY | 1200 |
| LATEX EMULSION | 12.5:1 | FINE SPRAY | 235 |
| RESIN IN WATER | 4:1 | FINE SPRAY | 300 |
| POLYCRYLAMIDE (PAM)–SPRAY ON POLYCRYLAMIDE (PAM)–DRY SPRAY | APPLY ACCORDING TO MANUFACTURER'S INSTRUCTIONS. MAY ALSO BE USED AS AN ADDITIVE TO SEDIMENT BASINS TO' FLOCCULATE AND PRECIPITATE SUSPENDED COLLOIDS. SEE SEDIMENT BASIN STANDARD (PG. 26–1). | | |
| ACIDULATED SOY BEAN SOAP STICK | NONE | COARSE SPRAY | 1200 |

R–3 RESIDENTIAL ZONE

| BULK REQUIREMENT DESCRIPTION | REQUIRED | PROPOSED |
|---|---|---|
| LOT AREA | 20,000 S.F. | 20,027 S.F. |
| LOT WIDTH @ STREET | 90 FT. | 103.50 FT. |
| LOT WIDTH @ SETBACK | 100 FT. | 103.50 FT. |
| FRONT YARD | 50 FT. | 50.5 FT. |
| REAR YARD | 50 FT. | 99.2 FT. |
| SIDE YARD | 15 FT. | 20.5 FT. |
| COMBINED SIDE YARD | 30% (31.0 FT.) | 39.6% (41.0 FT.) |
| IMPERVIOUS COVERAGE | | |
| MAX. COVERAGE | 4000+(20%)(20,027–10,000)=6,005 S.F. | 4,548 S.F. |
| PRINCIPAL STRUCTURE | 2000+(6%)(20,027–10,000)=2,601 S.F. | 2,436 S.F. |
| MAX. BUILDING HEIGHT | 35 FT. | 34.45 FT. |
| MAX. WIDTH OF DWELLING | 70 FT. | 62.5 FT. |

HEIGHT CALCULATIONS:

LOW POINT REFERENCE ELEVATION = 190.5
HIGH POINT REFERENCE ELEVATION = 194.0
AVERAGE GROUND ELEVATION = (190.5 + 194.0) / 2 = 192.25
PROPOSED RIDGE BEAM ELEVATION = 227.0
PROPOSED BUILDING HEIGHT = 226.7 – 192.25 = 34.45 FT. – OK

COVERAGE CALCULATIONS

| | PROPOSED |
|---|---|
| HOUSE | 2,389 S.F. |
| PORCH | 47 S.F. |
| FRONT WALK | 171 S.F. |
| PAVED DRIVEWAY | 1,111 S.F. |
| REAR DECK & WALK | 830 S.F. |
| TOTAL COVERAGE | 4,548 S.F. |

NOTES:

1.) THIS PLAN IS BASED UPON AN ACTUAL FIELD SURVEY PERFORMED ON AUGUST 21, 2017. IF THIS PLAN DOES NOT HAVE A RAISED SEAL, IT IS NOT AN OFFICIAL COPY AND THE SITE MAY HAVE CHANGED SINCE THE DATE OF THE FIELD SURVEY.

2.) VERTICAL DATUM IS ASSUMED AND IS BASED UPON BENCHMARK NAIL SET IN PAVEMENT AS SHOWN ON THIS PLAN, ELEVATION=194.20.

3.) THIS SURVEY DOES NOT INCLUDE INVESTIGATION OF ANY ENVIRONMENTAL MATTERS INCLUDING WETLANDS DELINEATION OR PRESENCE/ABSENCE.

4.) UNDERGROUND UTILITIES SHOWN ON THIS PLAN ARE BASED UPON SURFACE EVIDENCE AND VISIBLE MARKOUTS BY THE UTILITIY COMPANIES. ANDREW B. CLARKE, PLS, PE MAKES NO GUARANTEES, EXPRESS OR IMPLIED, REGARDING THE PRESENCE, ABSENCE OR EXACT LOCATIONS OF ANY UNDERGROUND UTILITIES IN THE VICINITY OF THE SUBJECT SITE, WHETHER OR NOT SHOWN ON THIS PLAN. IT IS THE RESPONSIBILTY OF ANY CONTRACTOR INTENDING TO EXCAVATE TO CALL FOR A MARKOUT AND VERIFY THE EXACT LOCATION AND DEPTH OF ANY UNDERGROUND UTILITIES PRIOR TO EXCAVATION.

5.) ALL LEADER DRAINS ARE TO BE CONNECTED TO THE DRY WELL SYSTEM.

6.) FOUNDATION DRAINS ARE TO BE DIRECTED INTO THE SUMP PIT THEN PUMPED DIRECTLY TO RIP–RAP AREA, AS SHOWN.

7.) PERCOLATION TEST IS TO BE PERFORMED BEFORE DRY WELL IS CONSTRUCTED.

8.) AN AREA AT LEAST 10 FEET WIDE AROUND THE FOUNDATION IN LANDSCAPED AREAS WILL BE GRADED DOWNWARD AT A 10% SLOPE AWAY FROM THE FOUNDATION.

9.) THE TOWNSHIP ENGINEER MUST BE NOTIFIED AT LEAST 72 HOURS IN ADVANCE OF INTALLATION OF THE STORMWATER MANAGEMENT SYSTEM AND RELATED APPURTANENCES.

10.) THE TOWNSHIP ENGINEER MUST BE NOTIFIED AT LEAST 72 HOURS IN ADVANCE OF INTALLATION OF THE CONNECTION TO THE SANITARY SEWER.

11.) THE CONTRACTOR WILL ADD ADDITIONAL SOIL EROSION AND SEDIMENT CONTROL MEASURES AS DIRECTED BY THE TOWNSHIP ENGINEER. INLET PROTECTION IS TO BE EMPLOYED FOR ALL EXISTING AND PROPOSED INLETS UNTIL SITE IS STABLIZED.

12.) NO STOCKPILE AREAS ARE PROPOSED ON SITE.

13.) EXISTING DWELLING, DRIVEWAY AND OTHER IMPROVEMENTS ARE TO BE REMOVED AND NEW DWELLING IS TO BE CONSTRUCTED AS SHOWN.

14.) ALL ROOF LEADER DRAINS WRE TO BE SCHEDULE 40 PVC AND INSTALLED AT A MINIMUM SLOPE OF 2% IF PIPE SLOPES OF LESS THAN 2% ARE NECESSARY, 6" SCHEDULE 40 PVC WILL BE USED.

15.) ALL EXISTING UTILITY CONNECTIONS ARE TO BE UTILIZED.

16.) THE CONTRACTOR MUST COORDINATE WITH THE TOWNSHIP TREE COMMITTEE REGARDING THE PROPOSED TREE REMOVAL ON THE SUBJECT LOT.

17.) THE ROOF LEADER COLLECTION PIPE FROM THE FOUNDATION LINE TO THE PROPOSED DRYWELLS IS TO BE 6 INCH DIAMETER.

18.) ALL EXCESS MATERIAL IS TO BE REMOVED FROM THE SITE AND SHALL ONLY BE DISPOSED OF AT AN APPROVED AND PERMITTED SITE. DOCUMENTATION OF APPROVED DISPOSAL MUST BE PROVIDED UPON REQUEST.

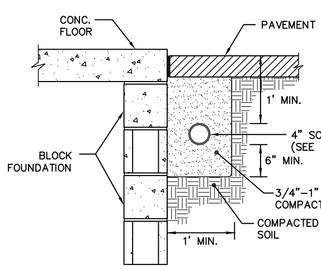


### DETAIL FOR ROOF LEADER DRAIN UNDER DRIVEWAY

SCALE N.T.S.

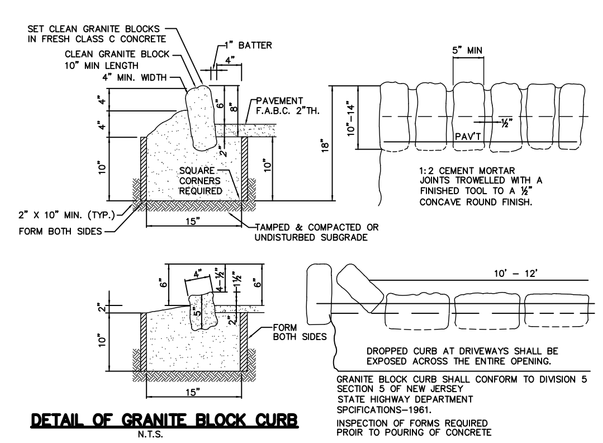


### DETAIL OF GRANITE BLOCK CURB

N.T.S.

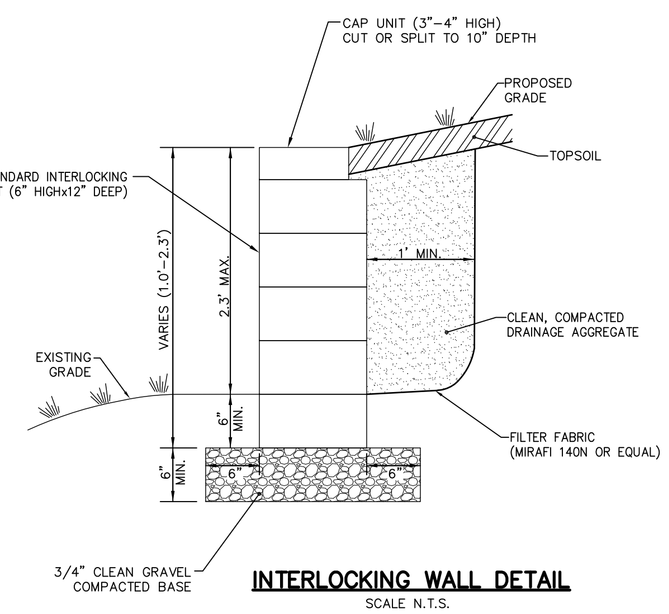


### INTERLOCKING WALL DETAIL

SCALE N.T.S.

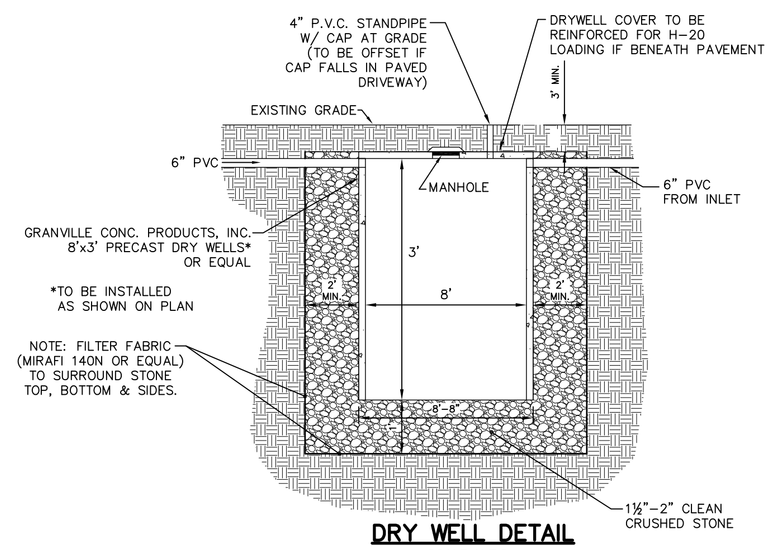


### DRY WELL DETAIL

SCALE N.T.S.

DRY WELL DESIGN (BASED ON DRAINAGE REPORT)

STORAGE REQUIRED = 1,174 FT.$^3$

STORAGE PROVIDED:
USING 4–8' DIA.x3' HIGH TANKS + STONE w/ 40% VOID RATIO
TANK – $(3.14)(4^2)(3)(4)$ = 600 FT.$^3$
STONE – (0.4) $[(26x26x4)–600]$ = 841 FT.$^3$

TOTAL STORAGE PROVIDED = 1,441 FT.$^3$ > 1,174 FT.$^3$ –OK

DRAIN TIME CALCULATION

PERMEABILITY RATE PER REPORT PREPARED BY ANS CONSULTANTS, INC., DATED JULY 5, 2019. REPORTED RATE=0.55 INCH/HOUR
WITH FACTOR OF SAFETY, APPLIED RATE = 0.55/2 = 0.275 IN/HR

RUNOFF VOLUME TO BE UTILIZED FOR WATER QUALITY DESIGN STORM IS TAKEN FROM DRAINAGE REPORT FOR 2–YEAR STORM FREQUENCY.=603 CF

CROSS SECTIONAL AREA = $(4)(3.14)(4^2)+0.4*[(26x26)–(4)(3.14)(4.33^2)]$
= 376 S.F.

OUTFLOW RATE = PERMEABILITY RATE x CROSS SECTIONAL AREA
= 0.275 IN/HR x 1/12 FT/IN X 376 S.F. = 8.6 CF/HR

DRAIN TIME = RUNOFF VOLUME/OUTFLOW RATE = 603/8.6 = 70 HR

70 HR < 72 HR. – OK

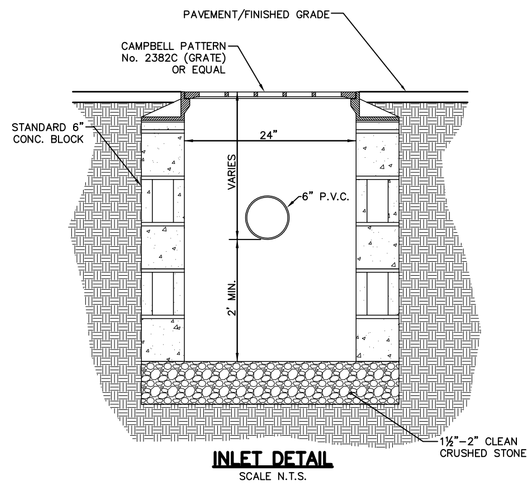


### INLET DETAIL

SCALE N.T.S.

REVISED: 08/06/19
REVISED: 03/25/19
REVISED: 11/08/17

# LOT GRADING PLAN

PREPARED FOR

## ARKAD GROUP

9 JAY ROAD
TAX LOT 113.06 IN BLOCK 108
TOWNSHIP OF CHATHAM
MORRIS COUNTY NEW JERSEY


ABC SURVEYS, LLC
PROFESSIONAL LAND SURVEYING AND ENGINEERING
466 SOUTHERN BOULEVARD
CHATHAM, NEW JERSEY 07928
VOICE 973-377-2174 FAX 973-377-5533

ANDREW B. CLARKE–PLS,PE
NJ PROFESSIONAL ENGINEER AND LAND SURVEYOR LICENSE No. GB04105600


JOB No.: 17045
DES.: A.B.C.
SCALE: 1"=20'
DATE: 09/29/17